Applied Energy 350 (2023) 121720

Contents lists available at ScienceDirect

Applied Energy

journal homepage: www.elsevier.com/locate/apenergy

A two-layer optimal configuration approach of energy storage systems for resilience enhancement of active distribution networks

Lei Chen [a,b,*], Yuqi Jiang [a,b], Shencong Zheng [a,b], Xinyi Deng [a,b], Hongkun Chen [a,b], Md. Rabiul Islam [c]

[a] School of Electrical Engineering and Automation, Wuhan University, Wuhan 430072, China
[b] Hubei Engineering and Technology Research Center for AC/DC Intelligent Distribution Network, School of Electrical Engineering and Automation, Wuhan University, Wuhan 430072, China
[c] Faculty of Engineering and Information Sciences, University of Wollongong, Wollongong, NSW 2522, Australia

HIGHLIGHTS

- Establish a two-layer optimization model to increase the resilience of ADNs.
- Optimize the allocation of battery ESSs and the operation of ADNs simultaneously.
- Validate the proposed approach in the modified IEEE 33-node and 118-node systems by comparing three intelligent algorithms.
- Assess the impacts of the proposed approach on the system resilience considering the multi-faults' development.

ARTICLE INFO

Keywords:
Active distribution networks
Energy storage systems
Optimal configuration
Resilience enhancement

ABSTRACT

Introducing energy storage systems (ESSs) into active distribution networks (ADNs) has attracted increasing attention due to the ability to smooth power fluctuations and improve resilience against fault disturbances. This paper proposes a methodology for simultaneously optimizing the configuration of battery ESSs and the operation of ADNs, and the goal is to increase the resilience of the ADNs withstanding multi-faults. Firstly, based on random sampling and K-means clustering, a generation strategy of typical N-1 and N-2 fault scenarios is designed for the ADNs. Then, a two-layer optimization model is established, where the inner model is to optimize the fault recovery performance from the operational perspective, and the outer model is to obtain the optimal site and size of ESSs from the economic perspective. Further, the second-order cone relaxing (SOCR) method and the hybrid gray wolf optimal and particle swarm optimal (GWO-PSO) algorithm are applied to solve the optimization model. Using MATLAB, the modified IEEE 33-node and 118-node systems are built to check the proposed approach's performance. Different periods are considered to show the multi-faults' development, and by introducing a resilience assessment system with node voltage deviation, fault recovery rate, and network loss rate, the resilience of the ADNs is analyzed. From the comparative results, the proposed approach can optimally configure the battery ESSs, and adjust the network structure as well as the distributed generation outputs. Following the ESS configuration cost reduction of 53.19% and 9.8%, the resilience of the ADNs against the multi-faults will increase by 13.36% and 8.25% for the 33-node and 118-node systems.

1. Introduction

1.1. Motivation

Currently, more and more distributed renewable energy sources have been integrated into the distribution system to form active distribution networks (ADNs). Due to the reasonable coordination control of distributed generators (DGs) and energy storage systems (ESSs), ADNs can provide favorable power supply flexibility and satisfy local load consumption more effectively [1–3].

Noting that, to ensure the sustainable development of ADNs, one of the major challenges is to increase the resilience of ADNs withstanding

* Corresponding author at: School of Electrical Engineering and Automation, Wuhan University, Wuhan 430072, China.
E-mail address: chen_lei@whu.edu.cn (L. Chen).

https://doi.org/10.1016/j.apenergy.2023.121720
Received 2 June 2023; Received in revised form 2 July 2023; Accepted 2 August 2023
Available online 10 August 2023
0306-2619/© 2023 Elsevier Ltd. All rights reserved.

extreme events, especially for unexpected multi-faults [4,5]. Herein, the fault recovery behaviors of ADNs under multi-fault scenarios should be given enough attention. The core of enhancing the resilience of ADNs is to achieve a continuous and sufficient power supply and assist in the fast recovery of critical loads. Considering the advance of ESSs in higher energy density, quicker power response, and better charge-discharge security [6–8] the application value of ESSs in ADNs has significantly increased. From the economic perspective, optimizing the location and capacity of ESSs could be a great option to fulfill the resilience enhancement of ADNs.

1.2. Literature review

Concerning the optimization of ESSs in ADNs, existing studies focus on mitigating the power fluctuations of REGs [9,10], boosting the transient stability [11,12], and enhancing the power quality [13,14] for the ADNs. There are still a few preliminary studies on employing ESSs to increase the resilience of ADNs.

In [15], an allocation strategy for ESSs is proposed to establish a balance between the economic benefits and resilience of ADNs. The method formulates the evaluation indexes on the failure probabilities of ADNs using Gaussian mixture models. In [16], ESSs are controlled as the isochronous generators to conduct voltage and frequency regulation, resulting in improving the resilience of ADNs against cyber-attacks. In [17], a defender-attacker-defender (DAD) model is suggested, and the goal is to utilize ESSs for boosting the resilience of ADNs during natural disasters. In [18], a scheduling model based on the information-gap decision theory is implemented in ESSs to enhance the resilience of ADNs. In the above studies, the fault scenarios caused by extreme events are relatively simple, and the fault development behaviors and the clustering of typical fault scenarios are absent.

In [19], a resilience enhancement method is proposed to transform ADNs into microgrids, where ESSs are conducted as the main power sources. In [20], a consecutive Horizon-based energy management process is designed to optimize the fast-charging stations integrated with battery ESSs. The process employs central supervisory control and resilient distributed control to maintain the codes of ADNs. In [21], a dynamic recovery strategy is put forward, and the core philosophy is to utilize ESSs and DGs fully to recover the power loads of ADNs while meeting the reliability requirements. In [22], a hybrid ESS that combines hydrogen and batteries is designed to increase the resilience of the microgrid, which can operate as an isolated power system during fault events. In [23], a comprehensive post-disaster restoration scheme is presented to optimize the resilience of ADNs. The scheme considers the operation of ESSs and network scheduling to reduce load outages. Nevertheless, the previous researches are mainly devoted to optimizing the charge and discharge behaviors of ESSs to enhance the anti-turbulence performance of ADNs. Optimizing the location and size of ESSs simultaneously for resilience enhancement should be explored further.

In [24], a two-stage planning model is established for energy hubs integrating with ESSs and DGs to enhance the resilience of ADNs. Based on the model validation, it is found that investment decisions are made, and load-shedding strategies are formulated in ADNs. In [25], a methodology for optimizing the capacity of ESSs and DGs in ADNs is put forward. The model mainly considers the network losses and the cost of ESSs and DGs, and a multi-objective sine-cosine algorithm is selected to solve the model. In [26], a multi-stage optimization is suggested for raising the resilience of ADNs, where the economics of mobile generations, demand side management, and configuration of ESSs are systematically considered. In [27], hybrid microgrid technology is applied in ADNs to increase resilience. The volume of ESSs and DGs in the microgrid is optimized based on the goal of minimizing the annual capital cost. Noting that, previous literature rarely concerns the joint optimization of ESSs and network operations to address the resilience problem of ADNs.

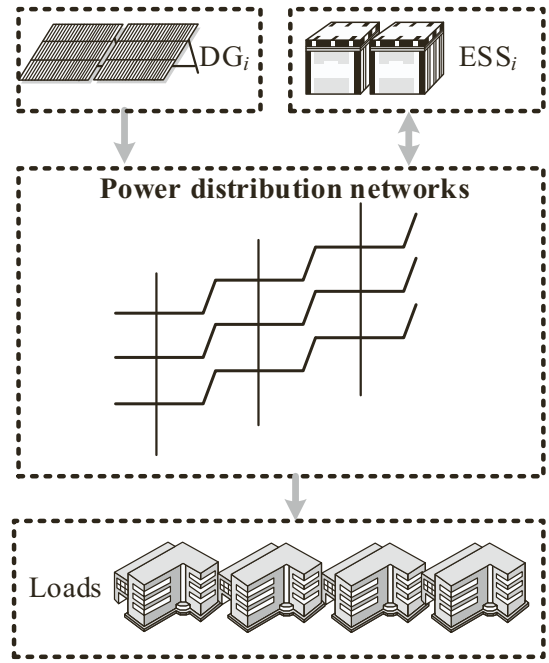

Fig. 1. Schematic of the ADNs with DG units and ESSs.

1.3. Contributions of this paper

The earlier studies demonstrate the benefits of ESSs being allocated optimally for the resilience increase of ADNs. However, the research gaps are discovered based on the above-mentioned literature review. It is noted that few studies concentrate on concurrently optimizing the allocation of ESSs and the operation of ADNs for withstanding multi-faults. The optimal computation rarely explores the clustering of typical N-1 and N-2 fault scenarios of ADNs. Further research is required to determine the quantitative impact of the optimal configuration of the ESSs on the resilience of ADNs while considering a multi-factor resilience evaluation and fault development patterns. To fill in the identified research gaps, this paper focuses on the impact of fault recovery schemes on the ESSs allocation, and a methodology for simultaneously optimizing the configuration of ESSs and the operation of ADNs is proposed. The main novelty and contributions of this paper are summarized as follows.

(1) Design a generation strategy of typical N-1 and N-2 fault scenarios for the ADNs based on random sampling and K-means clustering. The suggested generation strategy expands the range of multi-fault scenarios in light of differentiated outage loads and network losses.
(2) Propose a two-layer optimization model for ESSs to enhance the resilience of ADNs. The outer model aims to optimize the location and capacity of ESSs. The inner model is to optimize the fault recovery performance from the operations of network structure and distributed power sources.
(3) Apply the hybrid GWO-PSO algorithm to solve the outer model, and use Yamlip-CPLEX Optimizer to address the inner model. The searching performance of the hybrid GWO-PSO algorithm is compared with the GWO and PSO algorithms under different multi-fault scenarios.
(4) Verify the effectiveness of the proposed approach in the modified IEEE 33-node and 118-node systems. Different periods are considered to show the multi-faults' development, and a multi-factor resilience assessment system is introduced to quantify the proposed approach's effects on the resilience of the ADNs.

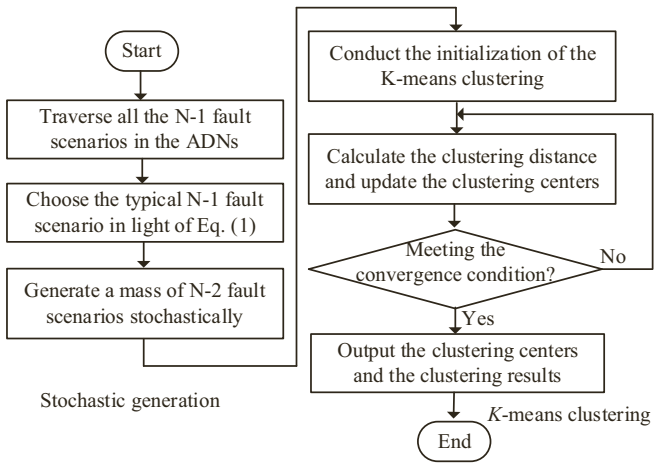

Fig. 2. Flow diagram of the generation strategy of typical N-1 and N-2 fault scenarios.

1.4. Organization of this paper

The remainder of this paper is organized as follows. Section 2 presents the clustering method of typical fault scenarios for ADNs. Section 3 is devoted to the two-layer optimization model of ESSs, and related constraint conditions are given. Section 4 addresses the model solution problem, and the details of the hybrid GWO-PSO algorithm are stated. Section 5 validates the proposed approach in different test systems, and the performance comparisons in multi-fault scenarios are carried out. In Section 6, the crucial conclusions are summarized, and future tasks are prospected.

2. Generation strategy of typical fault scenarios

Fig. 1 displays the schematic of the ADNs with DG units and battery ESSs. According to the power distribution networks, the DG units, battery ESSs, and local loads are coupled, and flexible power exchange in source-storage-load can be achieved. When multi-fault scenarios occur in the power distribution networks, there are significant differences in the outage loads and network losses. Consequently, typical fault scenarios can be clustered in light of the fault characteristic differences. In this study, weight coefficients are considered in outage loads and network losses, and the establishment of the fault characteristic quantities S is:

$$S = \omega_{load} \sum P_{load} + \omega_{net} \sum P_{net} \tag{1}$$

where $\sum P_{load}$ is the outage loads, and $\sum P_{net}$ indicates the network losses. ω_{load}, ω_{net} are the weights.

From Eq. (1), typical N-1 and N-2 fault scenarios can be obtained for the ADNs, and the generation strategy is stated as follows. All N-1 faults occurring in the ADNs are traversed, and the fault characteristic quantities S will be calculated. The fault scenario with the largest value of S is identified as the typical N-1 fault scenario. For acquiring the typical N-2 fault scenarios, introducing an efficient clustering method is needed, and it is because the number of N-2 fault scenarios in the ADNs is very considerable. Herein, the K-means clustering is specifically applied. Owing to the Euclidean distance-based clustering philosophy, the K-means clustering has the advantages of easy implementation and fast convergence [28], suiting for addressing the fault scenario reduction issue of the ADNs. In the designed generation strategy, stochastic simulation is used to generate a mass of N-2 fault scenarios, and the K-means clustering categorizes the typical N-2 fault scenarios according to the calculation of S. Fig. 2 displays the flow diagram of the generation strategy of typical N-1 and N-2 fault scenarios.

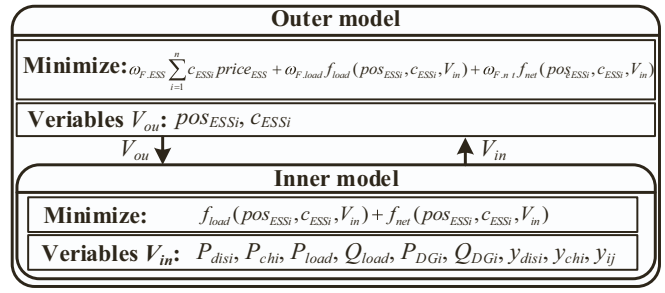

Fig. 3. Framework of the two-layer optimization model.

3. Optimization model establishment

Concerning that the typical fault scenarios are gained, a two-layer optimization model for ESSs configuration while considering the operation of the ADNs is established. As shown in Fig. 3, the framework of the two-layer optimization model is displayed. The proposed model can use all typical N-1 and N-2 fault scenarios for the optimal configuration of ESSs, consisting of the outer and inner models, where the exchanged variables are the optimization variables V_{ou} and V_{in}.

3.1. Outer model

3.1.1. Objective function

The outer model aims to optimize the location and capacity of ESSs from the economic perspective, and the optimization variables V_{ou} are designed as the location pos_{ESSi} and the capacity c_{ESSi} of the *i-th* ESS. The main function of the ESSs in the ADNs is to provide power support during multi-fault scenarios, and reducing the outage loads and network losses can be realized. The outer model's objective function F_{ou} is formulated as:

$$\begin{aligned} minF_{ou} &= \omega_{F.ESS}\sum_{i=1}^{n} c_{ESSi} price_{ESS} + \omega_{F.load} C_{load} + \omega_{F.net} C_{net} \\ &= \omega_{F.ESS}\sum_{i=1}^{n} c_{ESSi} price_{ESS} \\ &\quad + \omega_{F.load} f_{load}(pos_{ESSi}, c_{ESSi}, V_{in}) \\ &\quad + \omega_{F.net} f_{net}(pos_{ESSi}, c_{ESSi}, V_{in}) \end{aligned} \tag{2}$$

where n denotes the amount of the ESSs; $price_{ESS}$ represents the cost per unit of the ESSs. C_{load} indicates the load outage cost. C_{net} is the cost caused by the network losses of the ADNs. Considering the variables pos_{ESSi} and c_{ESSi} of the outer model affect the power flow of ADNs, C_{load}, C_{net} can be written as the non-explicit functions with pos_{ESSi} and c_{ESSi}, i.e., $C_{load} = f_{load}$ (pos_{ESSi}, c_{ESSi}, V_{in}) and $C_{net} = f_{net}$ (pos_{ESSi}, c_{ESSi}, V_{in}), where V_{in} denotes a collection of the optimization variables in the inner model. After obtaining pos_{ESSi} and c_{ESSi} from the outer model, C_{load} and C_{net} are calculated using the power flow calculation procedure in the inner model. $\omega_{F.ESS}$, $\omega_{F.load}$, and $\omega_{F.net}$ are the designed weight coefficients.

3.1.2. Constraints

1) Constraint on the capacity of the ESSs

$$c_{ESSi.min} \le c_{ESSi} \le c_{ESSi.max} \tag{3}$$

where $c_{ESSi.\min}$ and $c_{ESSi.\max}$ denote the lower and upper capacity limits of the *i-th* ESS in the ADNs.

2) Constraint on the number of the ESSs

$$\sum_{i=1}^{N} y_{ESSi} = n \quad \forall i \in N \tag{4}$$

where y_{ESSi} equals one means an ESS is connected at node i. N denotes all nodes in the ADNs. In this study, the proposed approach does not design any special relationship between DG and ESS locations. In other words, there is no tendency or assumption that the ESSs should be installed near the DGs. In principle, the ESSs could be installed at each candidate point of the ADNs. Nevertheless, considering the complexity of power adjustment in multiple ESSs to increase the resilience of the ADNs, the number of the ESSs should be limited. Meanwhile, if an excessive number of the ESSs are applied, their optimizing configuration may become more complicated. Therefore, a common treatment way is to give the constraint on the number of the ESSs. By referring to [29–31], the number of the ESSs is usually limited to 2– 6, and the case study chooses $n = 3$.

3) Constraint on the investment of the ESSs

$$0 \le \sum_{i=1}^{n} c_{ESSi} price_{ESS} \le inv_{\max} \tag{5}$$

where $inv_{\max}$ is the maximum investment of the ESSs.

4) Constraint on the load outage cost

$$0 \le C_{load} \le C_{load.max} \tag{6}$$

where $C_{load.\max}$ is the maximum load outage cost.

5) Constraint on the cost caused by the network losses

$$0 \le C_{net} \le C_{net.max} \tag{7}$$

where $C_{net.\max}$ is the maximum cost caused by the network losses.

3.2. Inner model

3.2.1. Objective function

The inner model is to optimize the fault recovery performance for resilience improvement from the operational perspective. The optimization variables V_{in} are the power outputs of the DG units, the charging and discharging status of the ESSs, as well as the operation status of the sectionalizing switches and tie switches. In theory, the optimal operation of the ADNs can be gained from these optimization variables.

The inner model's objective function F_{in} is:

$$\begin{aligned} minF_{in} &= C_{load} + C_{net} \\ &= f_{load}(pos_{ESSi}, c_{ESSi}, V_{in}) + f_{net}(pos_{ESSi}, c_{ESSi}, V_{in}) \end{aligned} \tag{8}$$

3.2.2. Constraints

1) Constraints on DistFlow

$$V_i - V_j = z_{ij} I_{ij} \quad \forall i,j \in \varepsilon \tag{9}$$

$$S_{ij} = V_i I_{ij}^* \quad \forall i,j \in \varepsilon \tag{10}$$

$$\sum_{k:j\to k} S_{jk} = \sum_{i:i\to j} \left(S_{ij} - z_{ij} \left| I_{ij} \right|^2 \right) + S_j \quad \forall i,j,k \in N \tag{11}$$

where V_i denotes the voltage at node i. z_{ij} is the impedance of the branch ij. I_{ij} is the current flowing on the branch ij. ε is the set of all branches of the ADNs. S_{ij} indicates the power from node i to node j. S_j is the power of node j:

$$S_j = S_{DG.j} + S_{dis.j} - S_{load.j} - S_{ch.j} \quad \forall j \in N \tag{12}$$

where $S_{DG.j}$ is the power of the DG connected to node j. $S_{dis.j}$ and $S_{ch.j}$ show the discharge and charge power of the ESS associated to node j, respectively. $S_{load.j}$ represents the load power of node j.

2) Constraints on the operating state of the ESSs

$$0 \le y_{disi} + y_{chi} \le 1 \tag{13}$$

$$\begin{cases} 0 \le P_{disi} \le P_{disi.max} & y_{disi} = 1 \\ P_{disi} = 0 & y_{disi} = 0 \end{cases} \tag{14}$$

$$\begin{cases} 0 \le P_{chi} \le P_{chi.max} & y_{chi} = 1 \\ P_{chi} = 0 & y_{chi} = 0 \end{cases} \tag{15}$$

where y_{disi} or y_{chi} equals 1, the i-th ESS is in the discharging or charging state. P_{disi}, $P_{disi.\max}$ are the discharge power and its maximum. P_{chi}, $P_{chi.\max}$ are the charge power and its maximum.

3) Constraints on the SoC of the ESSs

$$SoC_{i.k+1} = SoC_{i.k} + \eta_{chi} P_{chi} \Delta t - \frac{1}{\eta_{disi}} P_{disi} \Delta t \tag{16}$$

$$SoC_{i.min} \le SoC_i \le SoC_{i.max} \tag{17}$$

where $SoC_{i.k}$ denotes the State of Charge (SoC) of the i-th ESS at period k. η_{chi} represents the charging efficiency, and η_{disi} indicates the discharging efficiency of the i-th ESS. $SoC_{i.\max}$, $SoC_{i.\min}$ indicate the upper and lower limits of the SoC.

4) Constraints on the DG outputs

$$P_{DG.jmin} \le P_{DG.j} \le P_{DG.jmax} \tag{18}$$

$$Q_{DG.jmin} \le Q_{DG.j} \le Q_{DG.jmax} \tag{19}$$

where $P_{DG.j}$, $P_{DG.j\max}$, and $P_{DG.j\min}$ denote the active power of the DG connected to node j and their upper and lower limits, respectively. $Q_{DG.j}$, $Q_{DG.j\max}$, and $Q_{DG.j\min}$ show the reactive power of the DG connected to node j and their maximum and minimum outputs, respectively.

5) Constraint on the node voltage

$$V_{j.min} \le V_j \le V_{j.max} \tag{20}$$

where $V_{j.max}$ and $V_{j.min}$ signify the maximum and minimum limits of the voltage at node j, respectively.

6) Constraints on the branch current and power

$$\begin{cases} 0 \le S_{ij} \le S_{ij.max} & y_{ij} = 1 \\ S_{ij} = 0 & y_{ij} = 0 \end{cases} \tag{21}$$

$$\begin{cases} I_{ij.min} \le I_{ij} \le I_{ij.max} & y_{ij} = 1 \\ I_{ij} = 0 & y_{ij} = 0 \end{cases} \tag{22}$$

where $S_{ij.\max}$, $S_{ij.\min}$, $I_{ij.\max}$, and $I_{ij.\min}$ indicate the upper and lower limits of the power and current in branch ij. y_{ij} signifies the operation state of branch ij. $y_{ij} = 1$ indicates that branch ij is connected.

7) Constraints on radial topology

$$\sum y_{ij} = N - 1 \quad \forall (i,j) \in \varepsilon \tag{23}$$

$$\alpha_{ij} + \alpha_{ji} = y_{ij} \quad \forall (i,j) \in \varepsilon \tag{24}$$

$$\begin{cases} \sum_{j \in N} \alpha_{ij} = 0 & i = 1 \\ \sum_{j \in N} \alpha_{ij} = 1 & i = 2,3\ldots,N \end{cases} \tag{25}$$

where α_{ij} is a relational variable characterizing between node i and node j on branch ij. If the power flows from node i to node j, then $\alpha_{ij} = 1$, and vice $\alpha_{ij} = 0$.

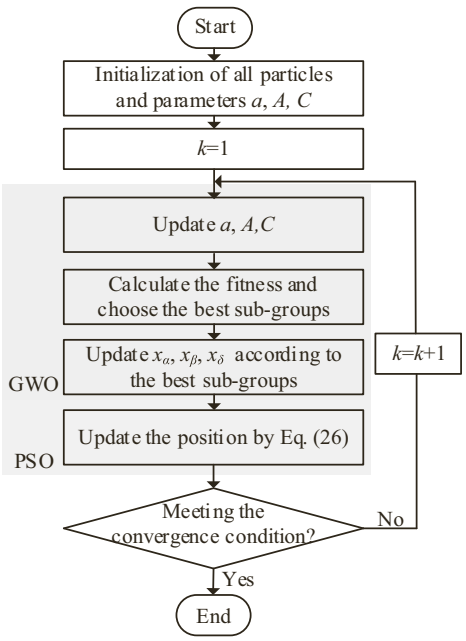

Fig. 4. Flowchart of the hybrid GWO-PSO algorithm.

4. Model-solving method

4.1. Outer model solving

Based on the outer model's objective function and constraints, a mixed-integer linear programming (MILP) problem can be treated. Since the non-explicit functions f_{load} (pos_{ESSi}, c_{ESSi}, V_{in}) and f_{net} (pos_{ESSi}, c_{ESSi}, V_{in}) in the objective function F_{ou} are affected by the inner model, expressing them as linear functions is a challenge. Thus, purely mathematical methods are unsuitable for solving the proposed outer model. In this study, the hybrid gray wolf optimal and particle swarm optimal (GWO-PSO) algorithm is applied, and it is expected that the combination of two different intelligence algorithms can bring better solution performance.

The PSO algorithm is a type of swarm that models the predatory behaviors of bird flocks [32], and it constantly updates the velocity and position of particles:

$$\begin{cases} v_i^{k+1} = v_i^k + c_1 r_1 \left(p_{best}^k - x_i^k\right) + c_2 r_2 \left(g_{best} - x_i^k\right) \\ x_i^{k+1} = x_i^k + v_i^{k+1} \end{cases} \tag{26}$$

where v denotes the particle's velocity. c_1, c_2 are the fixed parameters. r_1 and r_2 are the random parameters for each iteration. p_{best}^k represents the optimal position for the k-th iteration. g_{best} expresses the global optimal position, and x indicates the particle position.

The GWO algorithm is an optimization search method inspired by the hunting activities of gray wolves. During the hunting process, the population of wolves can be divided into some sub-groups, so-called α, β, δ [33]. The GWO algorithm uses Eq. (27) to locate the optimal position:

$$\begin{cases} D_j^k = \left|C x_j^k - x_i^k\right| \quad j = \alpha, \beta, \delta \\ x_{ij}^k = x_j^k - A D_j^k \\ x_i^{k+1} = x_i^k + \dfrac{\sum x_{ij}^k}{3} \end{cases} \tag{27}$$

where $C = 2r_1$, $A = 2ar_2$-a. a is a parameter that linearly decreases from 2 to 0. x_{ij}^k denotes the distance of the *i-th* individual from α, β, and δ sub-groups at the *k-th* iteration.

By introducing Eq. (28), the combination of the GWO and PSO algorithms is achieved:

$$\begin{cases} v_i^{k+1} = v_i^k + c_1 r_1 \left(x_\alpha - x_i^k\right) + c_2 r_2 \left(x_\beta - x_i^k\right) + c_3 r_3 \left(x_\delta - x_i^k\right) \\ x_i^{k+1} = x_i^k + v_i^{k+1} \end{cases} \tag{28}$$

In light of Eq. (28), the GWO and PSO algorithms can be implemented in parallel to enhance the convergence and searching performance. That is to say, the suggested hybrid GWO-PSO algorithm adopts the particle position updating to ensure the convergence speed, and employs the hunting activities of gray wolves to find a global optimal solution while preventing the local convergence. As displayed in Fig. 4, it shows the flowchart of the hybrid GWO-PSO algorithm for addressing the problem.

Noting that, the location and size optimization of the ESSs are performed simultaneously in the outer model solving. In terms of the hybrid GWO-PSO algorithm, the location pos_{ESSi} and the capacity c_{ESSi} of each ESS are randomly generated, and they are sent to the inner model to minimize the sum of the outage loads C_{load} and network losses C_{net} under different typical fault scenarios. Then, the outer model calculates the objective function F_{ou} by obtaining the optimization variable V_{in} of the inner model, and an optimal solution is determined through iterative computations. In this way, the simultaneous optimization of the ESS placement and sizing is achieved.

4.2. Inner model-solving

Concerning the inner model-solving, the main challenge is that the model constraints involve several optimization variables, such as S_{ij}, I_{ij}, and S_j. The equality constraints (10) and (11) and the inequality constraints (13)–(15), (21), and (22) are non-convex and nonlinear, and they cannot be solved mathematically. In this study, the second-order cone relax (SOCR) method with Big-M treatment is employed, and this method achieves a generalization of linear and quadratic programming that permits the affine combination of variables to be confined inside second-order cones [34]. This method can transform the inner model into a mixed-integer second-order cone programming (MISOCP) problem.

Regarding the equality constraint (10), the SOCR method can relax it into an inequality convex constraint:

$$l_{ij} v_i \geq P_{ij}^2 + Q_{ij}^2 \tag{29}$$

where $l_{ij} = \left|I_{ij}\right|^2$and $v_j = \left|V_j\right|^2$, and it means that the SOCR method performs the phase angle relaxation for I_{ij} and V_j.

Concerning the equality constraint (11), it can be transformed as:

$$\sum_{k:j\to k} P_{jk} = \sum_{i:i\to j} \left(P_{ij} - r_{ij} l_{ij}\right) + P_j \quad \forall i,j,k \in N \tag{30}$$

$$\sum_{k:j\to k} Q_{jk} = \sum_{i:i\to j} \left(Q_{ij} - x_{ij} l_{ij}\right) + Q_j \quad \forall i,j,k \in N \tag{31}$$

Aiming at the linearization of the inequality constraints (13)–(15), (21), and (22), the Big-M treatment is done to change the constraints according to different operation states. The resultant linearized constraints are presented as:

$$\begin{cases} 0 \leq P_{dis} \leq y_{dis} P_{dis.max} \\ 0 \leq P_{ch} \leq y_{ch} P_{ch.max} \end{cases} \tag{32}$$

$$\begin{cases} 0 \leq S_{ij} \leq y_{ij} S_{ij.max} \\ y_{ij} I_{ij.min} \leq I_{ij} \leq y_{ij} I_{ij.max} \end{cases} \tag{33}$$

After the linearization process is complete, solving the inner model can be achieved by employing the Yalmip toolbox and CPLES Optimizer, which offers flexible, high-performance mathematical programming solvers for handling the MISOCP problem [35].

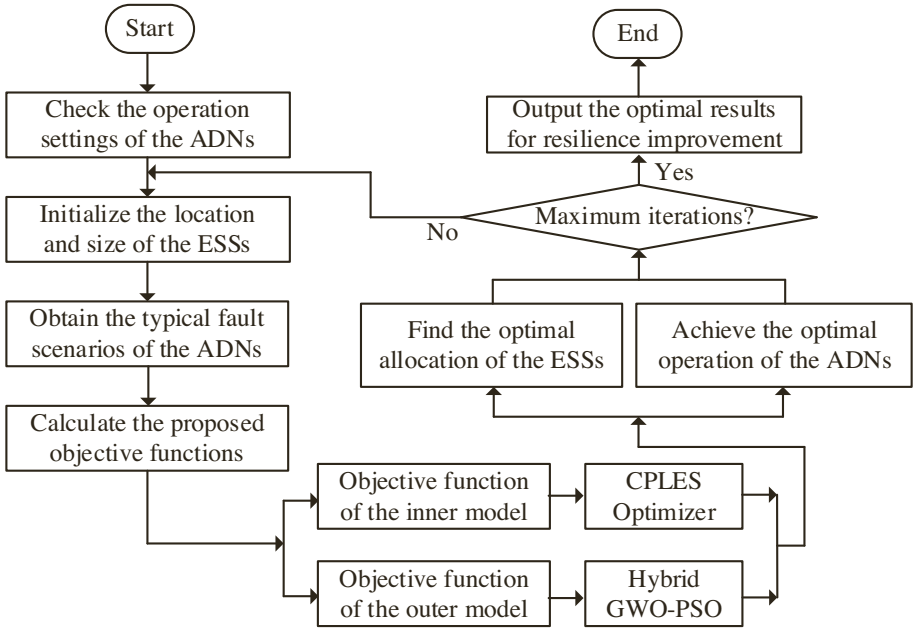

Fig. 5. Process of the optimization procedure.

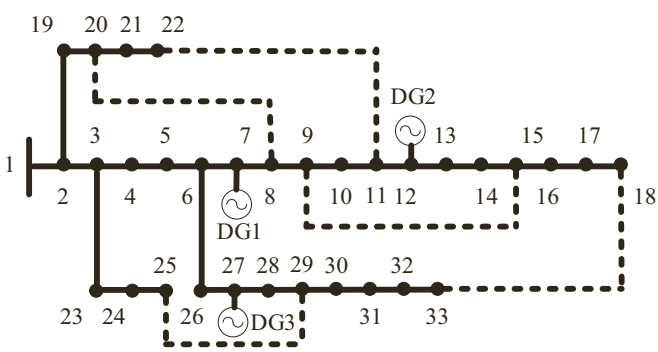

Fig. 6. Modified IEEE 33-node system model.

4.3. Overall process of the optimization procedure

The whole optimization procedure is depicted in Fig. 5, and the particular phases are provided below.

Step 1: Check the operation settings of the ADNs.

Step 2: Initialize the location and capacity of the ESSs in the ADNs.

Step 3: Traverse all the typical fault scenarios and solve the proposed two-layer optimization model.

Step 4: Optimize the location and capacity of the ESSs while achieving the optimal operation of the ADNs.

Step 5: Stop the iterative calculation when the maximum number of iterations has been reached.

Step 6: Output the two-layer model solution for the resilience improvement of the ADNs.

5. Case study

To validate the effectiveness and adaptability of the proposed approach, the modified IEEE 33-node and 118-node systems with DG units are modeled, and different intelligence algorithms are considered for performance comparison. The testing environment is MATLAB 2020a, and the test case is built on a personal computer with Intel Core i7–9700 CPU running at 3.00 GHz and 16 G of memory.

Table 1
Clustering results of the typical N-2 fault scenarios in the modified IEEE 33-node system.

Item	Fault site	ΣP_{load}/kW	ΣP_{net}/kW	S/kW
Fault I	5–6, 28–29	1255.21	194.54	1149.14
Fault II	15–16, 30–31	1126.20	209.86	1034.57
Fault III	14–15, 31–32	1378.29	210.56	1261.51

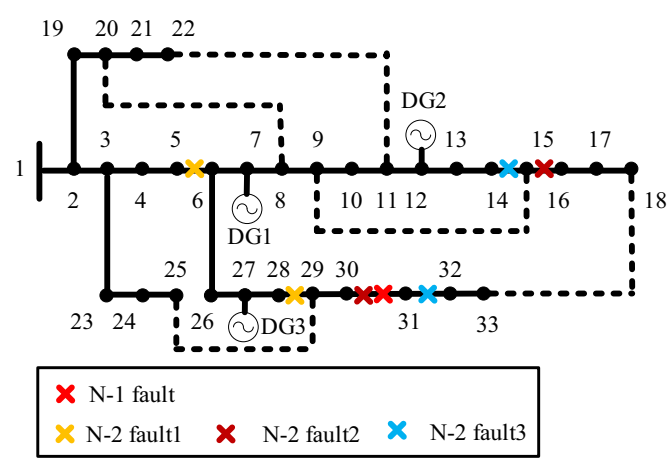

Fig. 7. Typical N-1 and N-2 fault scenarios in the modified IEEE 33-node system.

5.1. Modified IEEE 33-node system

Fig. 6 displays the schematic of the 33-node system, and three same DG units with $P = 2$ MW and $Q = 2$ MVAR are integrated at nodes 7, 12, and 27, respectively. The rated voltage is 12.66 kV, and the overall load is 3715 kW + j2300 kVAR. The other model parameters can refer to [36].

For the generation strategy of the typical fault scenarios, $\omega_{load} = 0.9$ and $\omega_{net} = 0.1$ are adopted in Eq. (1) to calculate the fault characteristic quantities S. Theoretically, different designs of the weights ω_{load} and ω_{net} will result in different fault characteristic quantities. As the resilience of

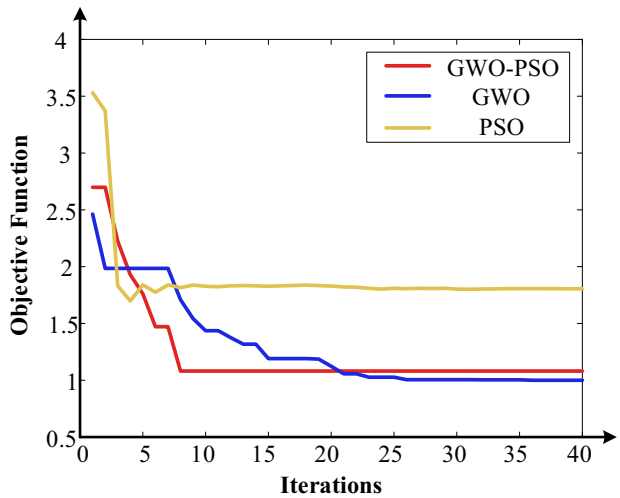

Fig. 8. Comparison of the three algorithms in addressing the outer model of the modified IEEE 33-node system.

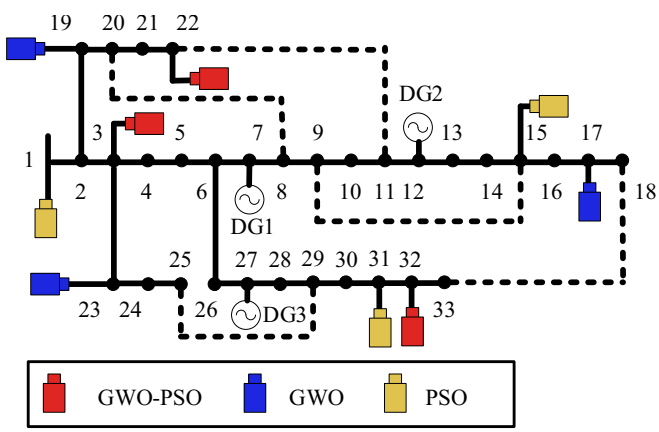

Fig. 9. Schematic of the optimal ESSs configuration in the modified IEEE 33-node system by the three algorithms.

the ADNs has a closer relationship to power outages and restoration, we highlight the outage loads and adopt a relatively minor consideration for the network losses, which affect the electricity cost of the ADNs. In this regard, the case study adopts $\omega_{load} = 0.9$ and $\omega_{net} = 0.1$. From the calculation, the typical N-1 fault scenario is branch 30–31 meeting a short-circuit fault, where $S = 1633.94$ kW is obtained. For the acquisition of the typical N-2 fault scenarios, Table 1 enumerates the clustering results based on the K-means. Fig. 7 shows the schematic diagram of the typical N-1 and N-2 fault scenarios in the 33-node system.

The above fault scenarios are pre-defined in the two-layer model for optimal configuration of the ESSs. Herein, Li-Ion batteries are applied, and $price_{ESS}$ is \$100/kWh [37]. The unit cost of the outage loads is \$167/kWh, and the unit cost of the network losses is \$3/kWh. The hybrid GWO-PSO, GWO, and PSO algorithms are adopted to solve the outer model. Fig. 8 compares the three algorithms in addressing the outer model of the 33-node system. From the figure, the PSO algorithm has a high convergence rate at the beginning of the iteration but cannot maintain a low objective function at the 5th iteration, leading to a partial convergence after the 10th iteration. The GWO algorithm converges to a lower objective function in the 26th iteration, but its convergence is slower and requires a longer computation time.

In contrast, the hybrid GWO-PSO algorithm has a faster convergence rate, converging to a minimum by the 8th iteration while holding steady. Thus, the hybrid GWO-PSO algorithm offers the best comprehensive optimization performance to address the outer model. Fig. 9 shows the

Table 2
Detailed configuration results of applying the ESSs in the modified IEEE 33-node system.

Item	ESS location	c_{ESS} /MWh	C_{ESS} /k\$	$\sum C_{ESS}$ /k\$
PSO	1	13.61	1361	4119
	15	13.62	1362	
	31	13.96	1396	
GWO	17	9.13	913	1954
	19	5.93	593	
	23	4.48	448	
Hybrid GWO-PSO	3	3.99	399	1928
	22	5.18	518	
	32	10.11	1011	

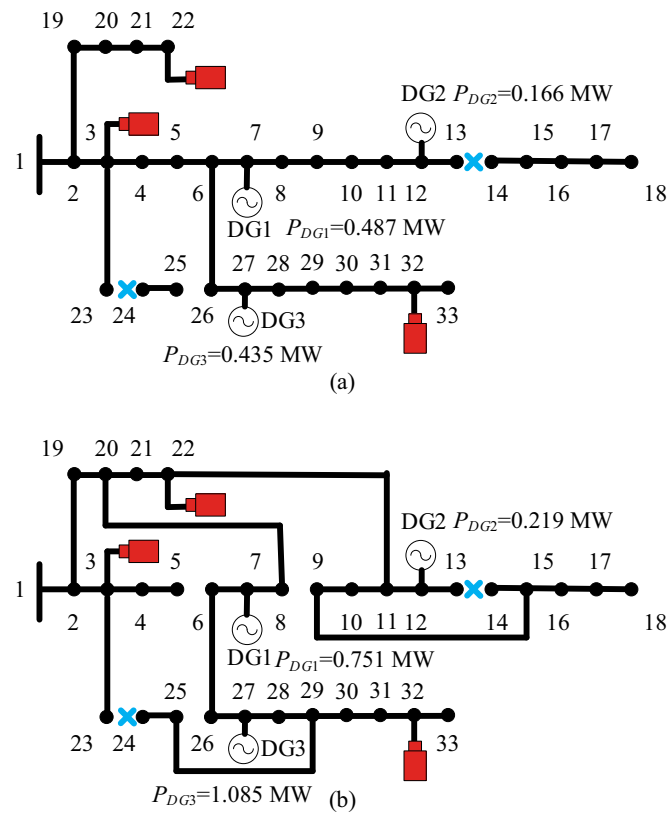

Fig. 10. Network structure and DG outputs of the modified IEEE 33-node system. (a) without the inner model, and (b) with the inner model.

ESSs configuration schemes obtained by the three algorithms, and the detailed configuration results are listed in Table 2.

From Table 2, the PSO algorithm incurs the highest cost of configuring the ESSs, and all three have similar installation capacities. The optimal configuration by the GWO is better than that by the PSO, saving the cost of the ESSs by 2165 k\$. By comparison, the hybrid GWO-PSO algorithm achieves the optimization of the ESSs in the ADNs with the least cost, and the cost curtailment rate can reach 53.19%.

In this study, the purpose of designing the inner model is to optimize the operation of the ADNs by adjusting the network structure and DG outputs. The comparison with and without the inner model is conducted to observe the effects of introducing the inner model on the outer model. The hybrid GWO-PSO algorithm with Yamlip-CPLEX Optimizer is used to solve the two-layer model. Herein, a N-2 fault appearing on branches 13–14 and 23–24 is selected, and Fig. 10 displays the network structure and DG outputs of the modified IEEE 33-node system.

Through the power flow calculation of the ADNs, the power and voltage of each node, as well as the current of each branch, can be gained. Without the inner model, ΣP_{load} and ΣP_{net} are obtained as 903

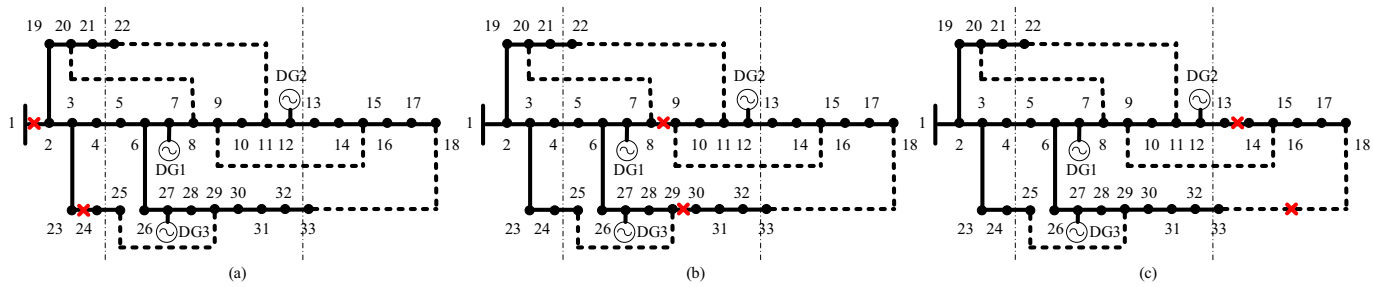

Fig. 11. Multi-fault scenarios in the modified IEEE 33-node system for resilience assessment. (a) Period 1, (b) Period 2, and (c) Period 3.

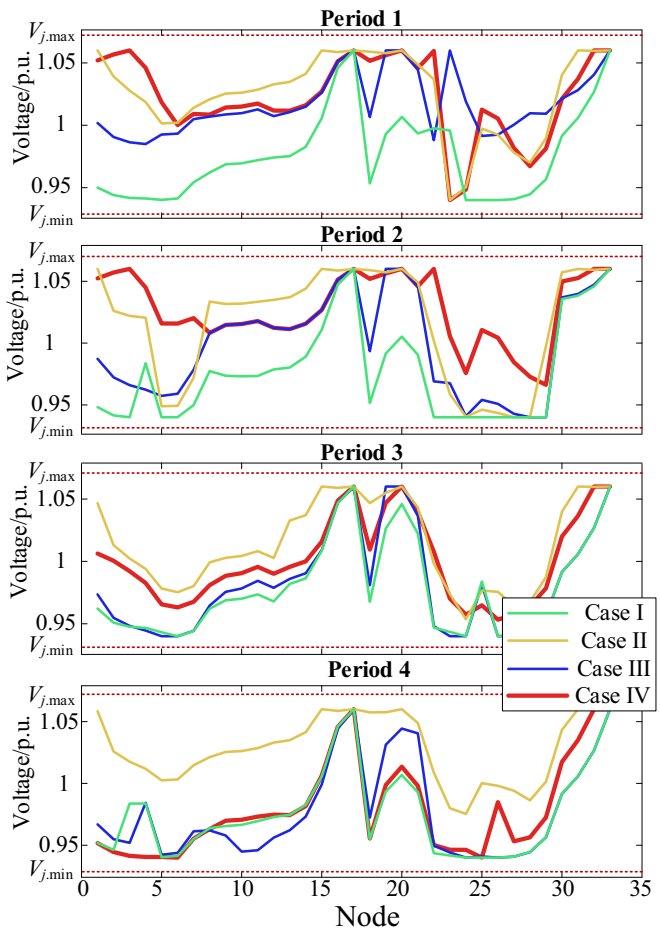

Fig. 12. Node voltage of the modified IEEE 33-node system with different optimal configurations of the ESSs. (a) Period 1, (b) Period 2, (c) Period 3, and (d) Period 4.

kW and 114 kW, and the expressions are $\Sigma P_{load} = \Sigma(P_{load.jref}–P_{load.j})$ and $\Sigma P_{net} = \Sigma l_{ij}R_{ij}$ [38], where $P_{load.jref}$ is the rating power of node j; $P_{load.j}$ is the real part of $S_{load.j}$; R_{ij} is the resistance of branch ij. After using the inner model, ΣP_{load} and ΣP_{net} will be changed to 278 kW and 164 kW. In the case study, the tie switches do not operate when the inner model is ignored, and branches 14–18 and 24–25 lose power and do not provide network losses for the ADNs. After introducing the inner model, the tie switches are driven to connect branches 8–20, 9–15, 11–22, and·25–29. More loads are recovered to improve the power flow, and accordingly, the increase of ΣP_{net} will be obtained. From the objective function of the inner model in Eq. (8), F_{in} is reduced from 151.14 k$ to 46.92 k$. Herein, as pos_{ESSi} and c_{ESSi} are determined by the outer model, Eq. (8) is rewritten as $F_{in} = C_{load} + C_{net} = f_{load}(pos_{ESSi}, c_{ESSi}, V_{in}) + f_{net}(pos_{ESSi}, c_{ESSi}, V_{in}) = price_{load}\Sigma P_{load} + price_{net}\Sigma P_{net}$.

To check the effects of the proposed approach on the resilience of the ADNs, the multi-fault scenarios considering different periods, as shown in Fig. 11, are established, and the resilience assessment is conducted. During period 1, faults occur in branches 1–2 and 23–24; In period 2, branches 8–9 and 29–30 meet the faults. In period 3, faults are developed to branches 13–14 and 18–33. Besides, period 4 is to mark that the multi-faults are completely recovered. Here, a comparison of four configuration cases of the ESSs is considered:

Case I: without ESSs in the ADNs.

Case II: the ESSs configuration strategy by the PSO and Yamlip-CPLEX Optimizer.

Case III: the ESSs configuration strategy by the GWO and Yamlip-CPLEX Optimizer.

Case IV: the ESSs configuration strategy by the hybrid GWO-PSO and Yamlip-CPLEX Optimizer.

Fig. 12 displays the node voltage of the 33-node system with different optimal configurations of the ESSs. The specified upper and lower voltage limits are 1.07 p.u. and 0.93 p.u., respectively [39]. It is observed that the node voltage of the 33-node system can always be within the specified limits under different cases, possessing a maximum of 1.06 p.u. and a minimum of 0.94 p.u. After considering four periods, the average voltage deviation $\overline{\Delta V}$of the 33-node system corresponding to Cases I ~ IV will be about 1.276%, 1.194%, 1.151%, and 1.108%, respectively. It means that Case IV achieves the best nodal voltage stabilization effect.

Fig. 13 displays the fault recovery performance of the 33-node system with different optimal configurations of the ESSs. In the case study, the fault recovery rate r_{load} is defined, and its expression is $r_{load} = 1-\Sigma P_{load}/P_{load\text{-}total}$, where $P_{load\text{-}total}$ is the total loads. In Cases I ~ IV, the fault recovery rate will be obtained as 88.1%, 98.2%, 95.8%, and 97.7%, respectively. Noting that, Case II achieves the best fault recovery performance, and the main reason is that the PSO and Yamlip-CPLEX Optimizer seek an optimal solution with a very considerable configuration cost of the ESSs to recover the loads. In comparison, Case IV is preferable, and a reduction of 0.5% of the fault recovery rate saves 2191 k$ for configuring the ESSs. In addition, the fault recovery rate of the 33-node system under different periods will be changeable. In Case IV, the 33-node system can realize 100% fault recovery during periods 2 and 3. Regarding periods 1 and 4, the fault recovery rate will be 97.2% and 94.3%.

The multi-factor resilience assessment system is built in light of the node voltage deviation $\overline{\Delta V}$, fault recovery rate r_{load}, and network loss rate $r_{net} = \Sigma P_{net}/P_{load\text{-}total}$. Based on the resilience assessment model presented in [40], the resilience assessment results of the 33-node system under different cases are listed in Table 3. Herein, concerning the assessment indicators of voltage deviation, fault recovery rate, and network losses, the normalization is conducted to change the values of the assessment indicators to a common scale without distortions caused by the different scales of features. The normalization expressions are deduced by $S_V = \overline{\Delta V}_{\min}/\overline{\Delta V}$, $S_{load} = r_{load}/r_{load.\max}$, and $S_{net} = r_{net.\min}/r_{net}$, where $r_{load.\max}$ is the maximum value of r_{load}; $r_{net.\min}$ and $\overline{\Delta V}_{\min}$ are the minimum values of r_{net} and $\overline{\Delta V}$. Regarding the weight setting for the

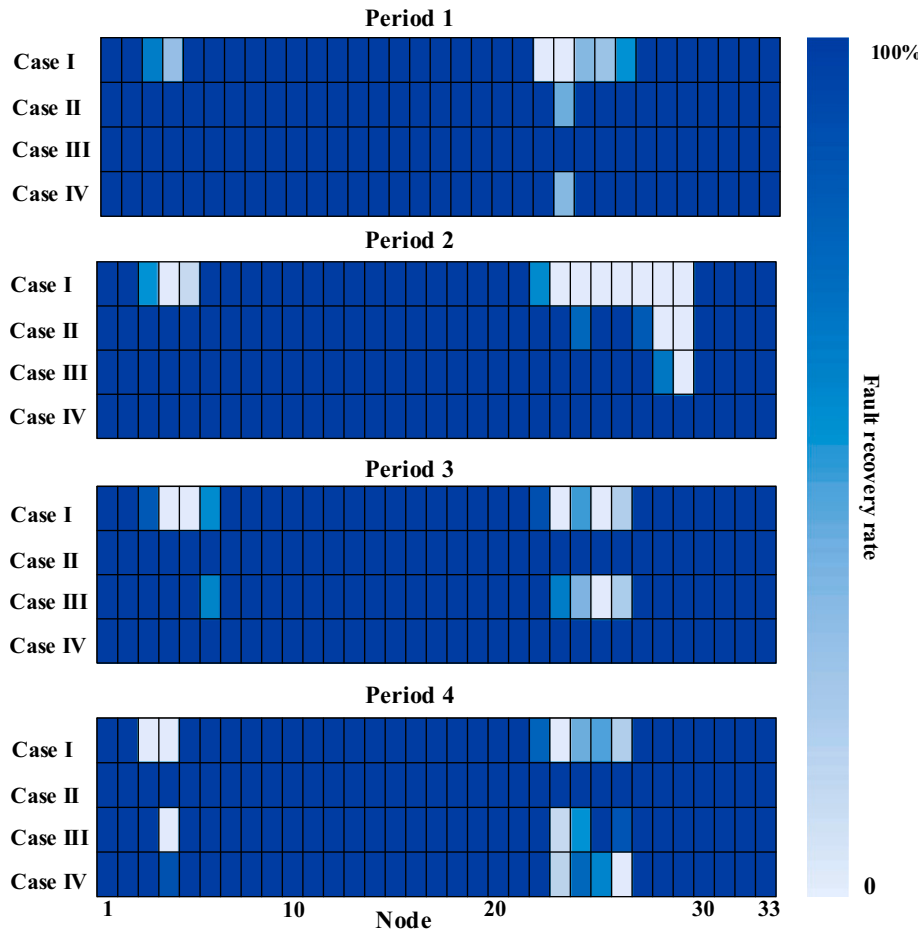

Fig. 13. Heatmap of the fault recovery performance of the modified IEEE 33-node system using different optimal configurations of the ESSs.

Table 3
Resilience assessment results of the modified IEEE 33-node system under different cases.

Item	r_{load}	r_{net}	$\overline{\Delta V}$	Resilience score
Case I	88.1%	2.5%	1.276%	87.59
Case II	98.2%	1.9%	1.194%	96.40
Case III	95.8%	2.3%	1.151%	96.16
Case IV	97.7%	2.1%	1.108%	99.29

Table 4
Optimal results of the ESSs in the modified IEEE 33-node system under different weights.

Item	ESS location	c_{ESS} /MWh	C_{ESS} /k$	$\sum C_{ESS}$ /k$
$\omega_{load} = 0.5$ $\omega_{net} = 0.5$	1	14.86	1486	3497.3
	17	8.563	856.3	
	29	11.55	1155	
$\omega_{load} = 0.9$ $\omega_{net} = 0.1$	3	3.99	399	1928
	22	5.18	518	
	32	10.11	1011	

resilience assessment indicators, the power and voltage of the ADNs are placed in equal importance, as a result of $\omega_{r.load}+\omega_{r.net}=\omega_{r.V} = 0.5$. Based on the weight combination $\omega_{load} = 0.9$, $\omega_{net} = 0.1$ for calculating the fault characteristic quantities of the ADNs, the same ratio is used to make $\omega_{r.load} = 0.45$, $\omega_{r.net}$=0.05. In this context, the resilience score of Case IV in the hundred-mark system is calculated as follows. Owing to $S_{load} = r_{load}/r_{load.\max} = 97.7\%/98.2\% = 99.49\%$, $S_{net} = r_{net.\min}/r_{net} = 1.9\%/2.1\% = 90.48\%$, and $S_V=\overline{\Delta V_{\min}}/\overline{\Delta V}$=1.108%/1.108% = 100% are gained, the resilience score will be 100 × (0.45 × 99.49% + 0.05 × 90.48% + 0.5 × 100%) = 99.29. As Case IV shows the highest resilience score, it offers the best performance for the ADNs in withstanding the faults.

Table 5
Resilience assessment results of the modified IEEE 33-node system under different weights.

Item	r_{load}	r_{net}	$\overline{\Delta V}$	Resilience score
$\omega_{load} = 0.5$ $\omega_{net} = 0.5$	96%	2.17%	1.12%	98.57
$\omega_{load} = 0.9$ $\omega_{net} = 0.1$	97.7%	2.1%	1.108%	99.29

To observe the effects of different weights ω_{load} and ω_{net}, a comparison of $\omega_{load} = 0.5$, $\omega_{net} = 0.5$ and $\omega_{load} = 0.9$, $\omega_{net} = 0.1$ is carried out. The optimal configuration of the ESSs and the resilience assessment results are listed in Tables 4 and 5. As compared to using $\omega_{load} = 0.5$, $\omega_{net} = 0.5$, adopting $\omega_{load} = 0.9$, $\omega_{net} = 0.1$ can achieve a lower allocation cost of the ESSs and a higher resilience score for the 33-node system.

5.2. Modified IEEE 118-node system

To test the effectiveness and suitability of the proposed approach for more complex ADNs, a modified IEEE 118-node system is built, and nine DGs are integrated in nodes 2, 7, 15, 40, 62, 74, 82, 94, and 108, respectively. Every DG's capacity has a consistent setting of $P = 2$ MW and $Q = 2$ MVAR. This system's rated voltage level is 11 kV, and the

Table 6
Clustering results of the typical N-2 fault scenarios in the modified IEEE 118-node system.

Item	Fault site	ΣP_{load}/MW	ΣP_{net}/MW	S/MW
Fault I	13–14, 78–79	7.18	0.15	6.48
Fault II	29–30, 104–105	9.46	0.07	8.52
Fault III	44–45, 75–76	7.03	0.16	6.49

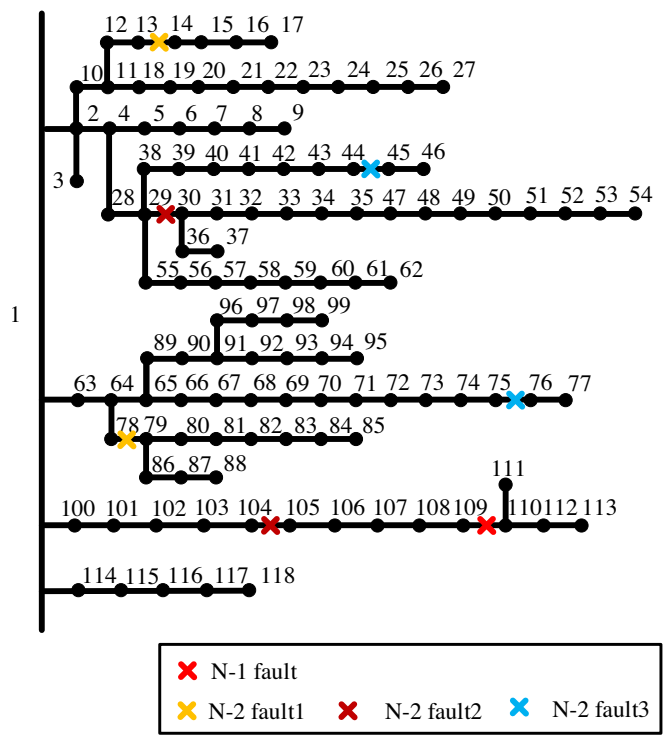

Fig. 14. Typical N-1 and N-2 fault scenarios in the modified IEEE 118-node system.

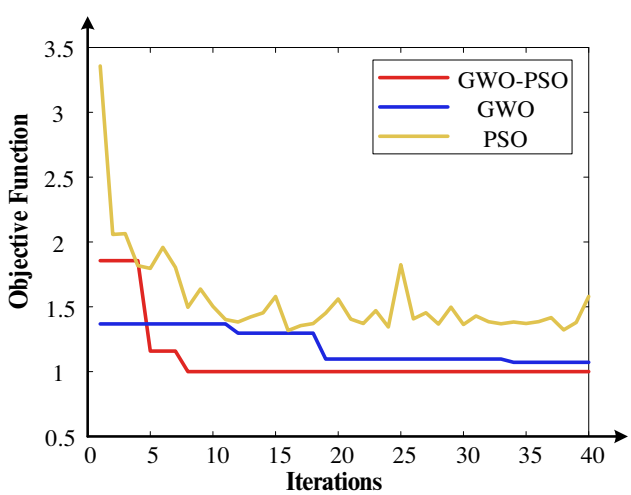

Fig. 15. Comparison of the three algorithms in addressing the outer model of the modified IEEE 118-node system.

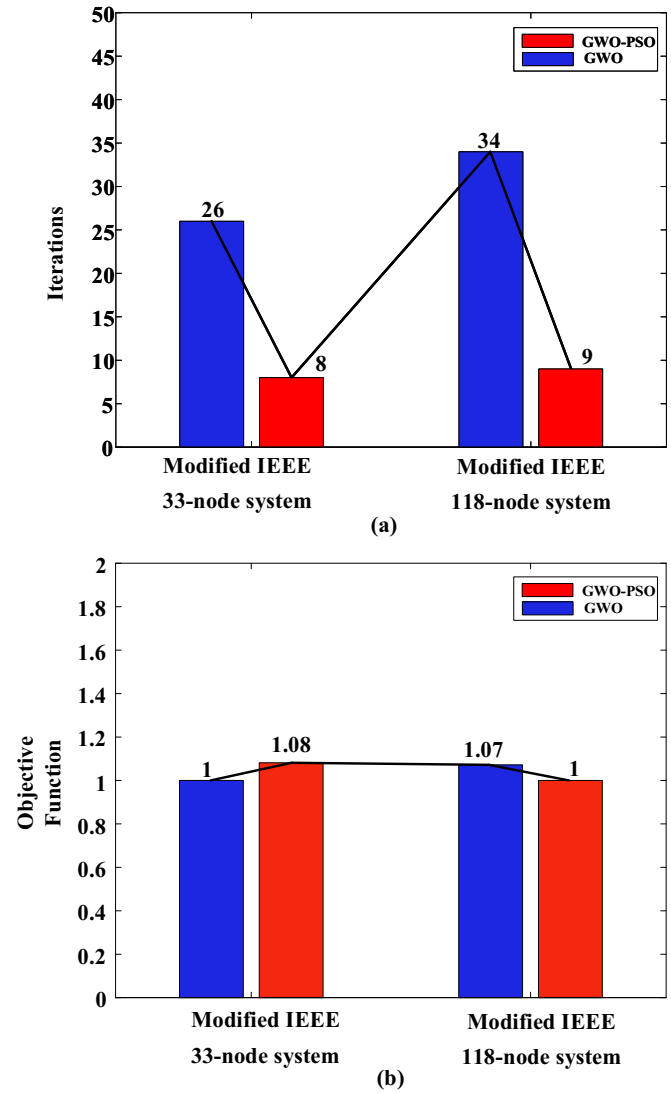

Fig. 16. Application of the GWO and the hybrid GWO-PSO algorithms in the modified IEEE 33-node and 118-node systems. (a) Iterations and (b) objective function.

overall load is 22.709 MW + j17.041 MVAR. The other model parameters can refer to [36].

The typical N-1 fault scenario is branch 109–110 meeting a short-circuit fault, where S = 8.95 MW is obtained by Eq. (1) with ω_{load} = 0.9, ω_{net} = 0.1. For the acquisition of the typical N-2 fault scenarios, Table 6 enumerates the clustering results based on the K-means philosophy, and the N-2 fault sites include branches 13–14, 78–79, 29–30, 104–105, 44–45, and 75–76. Fig. 14 shows the schematic diagram of the typical N-1 and N-2 fault scenarios in the 118-node system.

Fig. 15 compares the three algorithms in addressing the outer model of the 118-node system. From the figure, the PSO algorithm cannot converge within the 40th iteration. The GWO algorithm converges to a middle-lower objective function in the 34th iteration. In contrast, the hybrid GWO-PSO algorithm has a faster convergence rate, finding a minimum by the 9th iteration, and it converges to the lowest objective function for addressing the outer model with the best performance.

Furthermore, to more clearly explain the reason for selecting the hybrid GWO-PSO algorithm in this study, the number of iterations and objective function are both considered, and the application of the GWO and the hybrid GWO-PSO algorithms in the modified IEEE 33-node and 118-node systems is displayed in Fig. 16.

Along with the increase of the network complex, the GWO requires

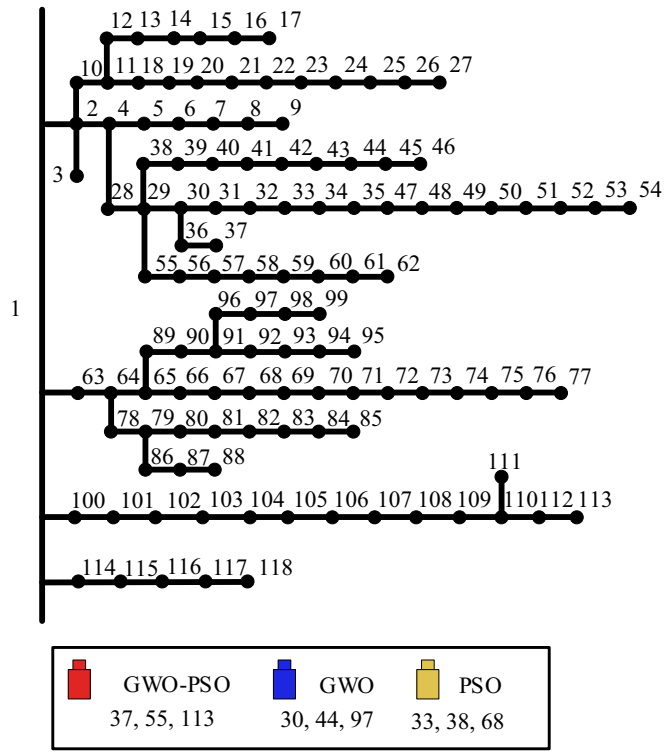

Fig. 17. Schematic of the optimal ESSs allocation in the modified IEEE 118-node system by the three algorithms.

Table 7
Detailed configuration results of installing the ESSs in the modified IEEE 118-node system.

Item	ESS location	c_{ESS} /MWh	C_{ESS} /k$	$\sum C_{ESS}$ /k$
PSO	33	20.084	2008.4	8054.5
	38	29.675	2967.5	
	68	30.786	3078.6	
GWO	30	17.027	1702.7	7923.5
	44	33.68	3368	
	97	28.528	2852.8	
Hybrid GWO-PSO	37	23.369	2336.9	7265.5
	55	15.569	1556.9	
	113	33.717	3371.7	

more long computation time to search for an optimal solution, but the hybrid GWO-PSO algorithm keeps a very favorable convergence speed, as there is almost no change of iterations. In other words, the difference in the computational efficiency between these two algorithms becomes more significant when the complex ADNs are adopted. While the optimal configuration of the ESSs does not have particularly strict requirements for calculating time, it is still appreciated for enhancing computational efficiency. For obtaining the objective function, the hybrid GWO-PSO outperforms the GWO in the 118-node system, and it is inferior to the GWO in the 33-node system. The results imply that the optimization performance of the hybrid GWO-PSO algorithm in the complex ADNs can be more fully utilized. Therefore, by comprehensively considering the computational efficiency, optimization results, and application networks of the algorithms, the hybrid GWO-PSO algorithm is more recommended, especially suiting for the development of the ADNs.

Fig. 17 shows the ESSs configuration schemes in the 118-node system obtained by the three algorithms. The detailed configuration results are listed in Table 7. In contrast to the optimal schemes by the PSO and GWO algorithms, the proposed approach with the hybrid GWO-PSO algorithm can save 789 k$ and 658 k$, respectively, and the cost curtailment rate will be 9.8% and 8.3%, respectively. It can be inferred that, along with the increased system scale, more ESSs will be appreciatively configured in the 118-node system to reduce the outage loads and network losses during faults. The proposed approach still effectively seeks the best optimal solution, while its cost-saving effect is alleviated compared to the 33-node system. In addition, from the optimization results of the modified IEEE 33-node and 118-node systems, it is found that there is no direct relationship between DG location and ESS location, and the theoretical analysis and case verification are consistent.

The multi-fault scenarios considering different periods, as shown in Fig. 18, are established, and the resilience assessment is conducted. During period 1, faults occur in branches 80–81 and 115–116; In period 2, branches 72–73 and 29–38 meet the faults. In period 3, the faults are developed to branches 4–5 and 15–16. In period 4, the faults are recovered. Moreover, four similar cases of configuring the ESSs under different model-solving algorithms are compared. In Cases I ~ IV, the average voltage deviation of the 118-node system will be 3.107%, 2.846%, 3.049%, and 2.781%, respectively. It means that Case IV achieves the best nodal voltage stabilization effect, which aligns with the simulation result in the 33-node system.

Fig. 19 displays the fault recovery performance in the 118-node system with different optimal configurations of the ESSs. The fault recovery rate decreases in front of the typical fault scenarios as the system size becomes more significant. Applying the ESSs can not meet the demand for 100% fault recovery. Concerning Cases I ~ IV, the fault recovery rate r_{load} will be obtained as 81.8%, 90.4%, 93.3%, and 91.1%, respectively; meanwhile, the network loss rate r_{net} will be about 1%, 1.8%, 1.8%, and 1.9%, respectively. Through adopting the resilience calculation method in the 33-node system, Table 8 lists the resilience assessment results of the 118-node system under different cases.

Herein, Case IV shows the best performance to increase the system

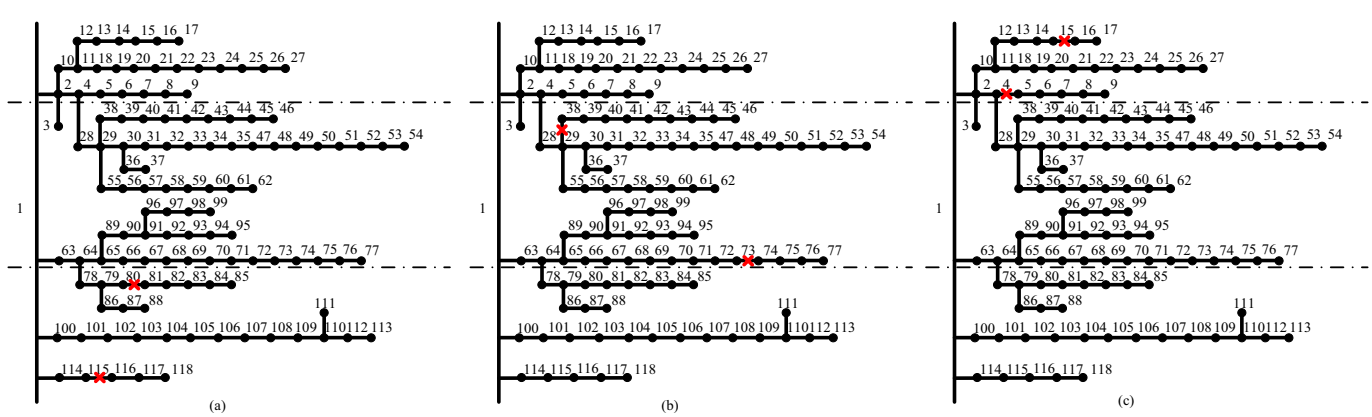

Fig. 18. Multi-fault scenario in the modified IEEE 118-node system for resilience assessment. (a) Period 1, (b) Period 2, and (c) Period 3.

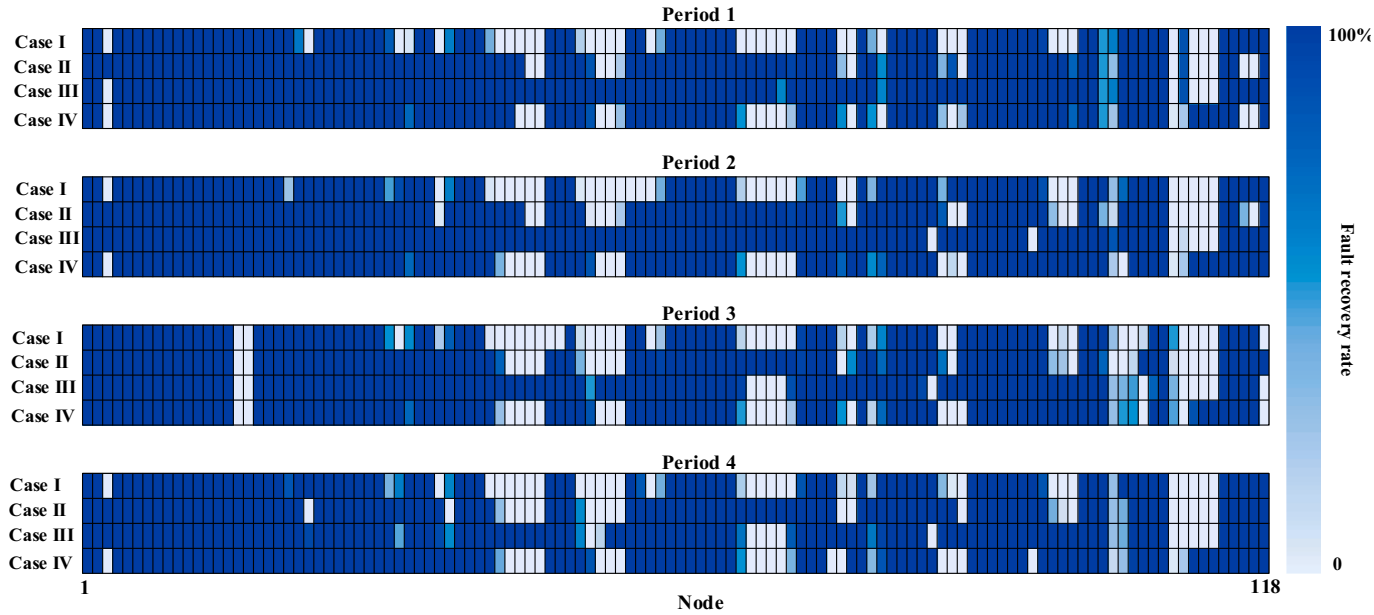

Fig. 19. Heatmap of the fault recovery performance in the modified IEEE 118-node system with different optimal configurations of the ESSs.

Table 8
Resilience assessment results of the modified IEEE 118-node system under different cases.

Item	r_{load}	r_{net}	$\overline{\Delta V}$	Resilience score
Case I	81.8%	1%	3.107%	89.21
Case II	90.4%	1.8%	2.846%	95.24
Case III	93.3%	1.8%	3.049%	93.38
Case IV	91.1%	1.9%	2.781%	96.57

resilience, and this conclusion is consistent with that in the 33-node system. Noting that, for the 118-node system, Case II outperforms Case III, and the main reason is that the convergence behaviors of the PSO are weaker than that of the GWO in the complex power network. Furthermore, compared to Case I, the proposed approach demonstrates the resilience improvement ratio of 13.36% and 8.25% for the imitated 33-node and 118-node systems. The proposed approach is suitable for addressing the resilience problem at different scales of the ADNs. Therefore, its effectiveness and suitability are well confirmed.

6. Conclusions

This paper puts forward a methodology for simultaneously optimizing the configuration of ESSs and the operation of ADNs, and the goal is to increase the resilience of the ADNs withstanding multi-faults. The two-layer optimization model and its solution strategy are presented, and considering different intelligence algorithms, the comparative verification of the proposed approach in the modified IEEE 33-node and 118-node systems is carried out. The major findings of this work are summarized below.

(1) The proposed two-layer optimization model has good adaptability to cope with different scales of the ADNs. The hybrid GWO-PSO algorithm outperforms the PSO and GWO algorithms, with the computation time reduction of 82% and 73.53%, respectively, enabling the identification of the best global solution more quickly and availably.
(2) The proposed approach can simultaneously optimize the configuration of ESSs and the operation of ADNs under typical N-1 and N-2 fault scenarios. Different periods are considered to show the multi-faults' development, and the proposed approach's efficacy is demonstrated, with the ESS configuration cost reduction of 53.19% and 9.8% for the 33-node and 118-node systems.
(3) The proposed approach can effectively increase the resilience of the ADNs. Based on the resilience evaluation indexes with node voltage deviation, fault recovery rate, and network loss rate, the comprehensive performance of the ADNs withstanding the multi-faults is enhanced, with the resilience increase of 13.36% and 8.25% for the 33-node and 118-node systems.

As a result, the efficacy and applicability of the proposed approach are verified. Shortly, our research team plans to explore the application of the proposed approach in the regional integrated energy distribution networks. The research findings will be reported in other articles.

CRediT authorship contribution statement

Lei Chen: Writing – original draft, Validation, Supervision, Methodology, Data curation, Conceptualization. **Yuqi Jiang:** Writing – original draft, Validation, Software, Data curation. **Shencong Zheng:** Writing – review & editing, Formal analysis. **Xinyi Deng:** Validation, Software, Methodology. **Hongkun Chen:** Supervision, Methodology. **Md. Rabiul Islam:** Writing – review & editing.

Declaration of Competing Interest

The authors declare that they have no known competing financial interests or personal relationships that could have appeared to influence the work reported in this paper.

Data availability

No data was used for the research described in the article.

Acknowledgments

This work was supported by the National Natural Science Foundation of China under Grant 51877154.

References

[1] Li C, Xi Y, Lu Y, Liu N, Chen L, Ju L, et al. Resilient outage recovery of a distribution system: co-optimizing mobile power sources with network structure. Prot Control Mod Power Syst 2022;7(1):32–44.

[2] Souto L, Yip J, Wu W, Austgen B, Kutanoglu E, Hasenbein J, et al. Power system resilience to floods: modeling, impact assessment, and mid-term mitigation strategies. Int J Electr Power Energy Syst 2022;135:107545.

[3] Nour AMM, Helal AA, El-Saadawi MM, Hatata AY. Voltage imbalance mitigation in an active distribution network using decentralized current control. Prot Control Mod Power Syst 2023;8(2):332–48.

[4] Jufri FH, Widiputra V, Jung J. State-of-the-art review on power grid resilience to extreme weather events: definitions, frameworks, quantitative assessment methodologies, and enhancement strategies. Appl Energy 2019;239:1049–65.

[5] Hu B, Li M, Niu T, Zhou P, Li Y, Xie K, et al. Hardening planning of overhead distribution lines in typhoon-prone areas by considering the typhoon motion paths and the line load reliability. Int J Electr Power Energy Syst 2021;129:106836.

[6] Li P, Ji J, Chen S, Ji H, Xu J, Song G, et al. Multi-stage expansion planning of energy storage integrated soft open points considering tie-line reconstruction. Prot Control Mod Power Syst 2022;7(4):683–97.

[7] Saini P, Gidwani L. An investigation for battery energy storage system installation with renewable energy resources in distribution system by considering residential, commercial and industrial load models. J Energy Storage 2022;45:103493.

[8] Zhang X, Liu Y, Zeng Y, Wu G, Liu J. Prosumer-centric ESS and high voltage distribution network topology co-optimisation for urban grid congestion management. IET Smart Grid 2022;5(4):297–307.

[9] Cao M, Xu Q, Qin X, Cai J. Battery energy storage sizing based on a model predictive control strategy with operational constraints to smooth the wind power. Int J Electr Power Energy Syst 2020;115:105471.

[10] Li S, Li Y, Chen X, Li T, Zhang W. A novel flexible power support control with voltage fluctuation suppression for islanded hybrid AC/DC microgrid involving distributed energy storage units. Int J Electr Power Energy Syst 2020;123:106265.

[11] Shan Y, Hu J, Guerrero JM. A model predictive power control method for PV and energy storage systems with voltage support capability. IEEE Trans Smart Grid 2020;11(2):1018–29.

[12] Ahmed M, Meegahapola L, Datta M, Vahidnia A. A novel hybrid AC/DC microgrid architecture with a central energy storage system. IEEE Trans Power Deliv 2022;37(3):2060–70.

[13] Zhou J, Sun H, Xu Y, Han R, Yi Z, Wang L, et al. Distributed power sharing control for islanded single-/three-phase microgrids with admissible voltage and energy storage constraints. IEEE Trans Smart Grid 2021;12(4):2760–75.

[14] Bacon VD, da Silva SAO, Guerrero JM. Multifunctional UPQC operating as an interface converter between hybrid AC-DC microgrids and utility grids. Int J Electr Power Energy Syst 2022;136:107638.

[15] Wang Z, Zhang L, Tang W, Chen Y, Shen C. Equilibrium allocation strategy of multiple ESSs considering the economics and restoration capability in DNs. Appl Energy 2022;306:118019.

[16] Chlela M, Mascarella D, Joós G, Kassouf M. Fallback control for isochronous energy storage systems in autonomous microgrids under denial-of-service cyber-attacks. IEEE Trans Smart Grid 2018;9(5):4702–11.

[17] Zhang H, Ma S, Ding T, Lin Y, Shahidehpour M. Multi-stage multi-zone defender-attacker-defender model for optimal resilience strategy with distribution line hardening and energy storage system deployment. IEEE Trans Smart Grid 2021;12(2):1194–205.

[18] Izadi M, Hossein Hosseinian S, Dehghan S, Fakharian A, Amjady N. Resiliency-oriented operation of distribution networks under unexpected wildfires using multi-horizon information-gap decision theory. Appl Energy 2023;334:120536.

[19] Kia A, Farzinfar M, Amirahmadi M, Samieimoghaddam M. A resilience-oriented methodology for transformation of the distribution networks into MicroGrid. Int Trans Electr Energy Syst 2022;2022:6459044.

[20] Zahedmanesh A, Muttaqi KM, Sutanto D. Active and reactive power control of PEV fast charging stations using a consecutive horizon-based energy management process. IEEE Trans Ind Inform 2021;17(10):6742–53.

[21] Deng Y, Jiang W, Hu F, Sun K, Yu J. Resilience-oriented dynamic distribution network with considering recovery ability of distributed resources. IEEE J Emerg Sel Topics Circuits Syst 2022;12(1):149–60.

[22] Tobajas J, Garcia-Torres F, Roncero-Sánchez P, Vázquez J, Bellatreche L, Nieto E. Resilience-oriented schedule of microgrids with hybrid energy storage system using model predictive control. Appl Energy 2022;306:118092.

[23] Yao S, Wang P, Zhao T. Transportable energy storage for more resilient distribution systems with multiple microgrids. IEEE Trans Smart Grid 2019;10(3):3331–41.

[24] Xuan A, Shen X, Guo Q, Sun H. A conditional value-at-risk based planning model for integrated energy system with energy storage and renewables. Appl Energy 2021;294:116971.

[25] Ahmadi B, Ceylan O, Ozdemir A, Fotuhi-Firuzabad M. A multi-objective framework for distributed energy resources planning and storage management. Appl Energy 2022;314:118887.

[26] Rajabzadeh M, Kalantar M. Improving the resilience of distribution network in coming across seismic damage using mobile battery energy storage. J Energy Storage 2022;52:104891.

[27] Kashanizadeh B, Shourkaei HM, Fotuhi-Firuzabad M. Short-term resilience-oriented enhancement in smart multiple residential energy system using local electrical storage system, demand side management and mobile generators. J Energy Storage 2022;52:104825.

[28] Fu X, Wu X, Zhang C, Fan S, Liu N. Planning of distributed renewable energy systems under uncertainty based on statistical machine learning. Prot Control Mod Power Syst 2022;7(1):41–67.

[29] Nick M, Cherkaoui R, Paolone M. Optimal planning of distributed energy storage systems in active distribution networks embedding grid reconfiguration. IEEE Trans Power Syst 2018;33(2):1577–90.

[30] Zheng Y, Song Y, Huang A, Hill DJ. Hierarchical optimal allocation of battery energy storage systems for multiple services in distribution systems. IEEE Trans Sustain Energy 2020;11(3):1911–21.

[31] Jiang X, Chen J, Zhang W, Wu Q, Zhang Y, Liu J. Two-step optimal allocation of stationary and mobile ESSs in resilient distribution networks. J Mod Power Syst Clean Energy 2021;9(4):788–99.

[32] Wang X, Henshaw P, Ting DS-K. Exergoeconomic analysis for a thermoelectric generator using mutation particle swarm optimization (M-PSO). Appl Energy 2021;294:116952.

[33] Radmanesh M, Kumar M, Sarim M. Grey wolf optimization based sense and avoid algorithm in a Bayesian framework for multiple UAV path planning in an uncertain environment. Aerosp Sci Technol 2018;77:168–79.

[34] Farivar M, Low SH. Branch flow model: relaxations and convexification—part I. IEEE Trans Power Syst 2013;28(3):2554–64.

[35] Qiu Y, Li Q, Wang T, Yin L, Chen W, Liu H. Optimal planning of cross-regional hydrogen energy storage systems considering the uncertainty. Appl Energy 2022;326:119973.

[36] Dehghani NL, Shafieezadeh A. Multi-stage resilience management of smart power distribution systems: a stochastic robust optimization model. IEEE Trans Smart Grid 2022;13(5):3452–67.

[37] Liu J, Jian L, Wang W, Qiu Z, Zhang J, Dastbaz P. The role of energy storage systems in resilience enhancement of health care centers with critical loads. J Energy Storage 2020;33:102086.

[38] Wang C, Sun J, Huang M, Zha X, Hu W. Two-stage optimization for active distribution systems based on operating ranges of soft open points and energy storage system. J Mod Power Syst Clean Energy 2023;11(1):66–79.

[39] Zhang D, Li J, Hui D. Coordinated control for voltage regulation of distribution network voltage regulation by distributed energy storage systems. Prot Control Mod Power Syst 2018;3(1):1–8.

[40] Chen L, Jiang Y, Deng X, Chen H, Zheng S. A novel fault recovery method of active distribution networks oriented to improving resilience. Energy Rep 2022;8:456–66.